# A Comparison of Two Approaches to Feedback Circuit Analysis

Paul J. Hurst, *Member, IEEE*

***Abstract*—Two approaches for analyzing single-loop feedback circuits are compared and contrasted in this paper. One approach is based on the return-ratio concept, and the other is based on two-port analysis. A frequent error in many popular texts—interchanging the computation of return ratio for a dependent source and loop gain of the idealized feedback network—is discussed. Assumptions commonly made in many texts when presenting two-port feedback analysis are examined for validity. Examples are given to highlight the differences between the two approaches.**

## I. Introduction

FEEDBACK is an important concept in electrical engineering. It is usually covered both in control system courses and electronic circuits courses. New terminology and concepts (stability, phase margin, open- and closed-loop parameters) add to the difficulty associated with presenting this material to students. Analysis of feedback circuits is complicated by the interaction of the feedback network and the forward amplifier. Since feedback is present in virtually all analog circuits, it is important that students develop a good understanding of the concepts and learn sound analysis methods.

Feedback analysis as presented in most modern circuit design texts relates the closed-loop properties of feedback circuits to the open-loop properties of an appropriately defined forward amplifier $a$, reverse transmission factor $f$, and loop gain $af$ [1], [2], corresponding to the ideal feedback block diagram in Fig. 1(a). This analysis method is based on two-port analysis of the amplifier and feedback networks and manipulation of the resulting two-ports to match the ideal feedback block diagram in Fig. 1(a). In the original feedback text by Bode [3] and in some other circuit texts [4]–[6], the closed-loop properties of feedback circuits are described in terms of the *return ratio* of a dependent source in an active device. The corresponding block diagram for return-ratio-based feedback analysis is shown in Fig. 1(b). The two analysis methods are different, as can be seen by comparing Fig. 1(a) and (b). For example, the two-port approach yields a block diagram with all forward transmission lumped into "a." In contrast, the return-ratio approach has two forward paths. As will be shown, the loop transmissions [$af$ in Fig. 1(a) and $RR$ in Fig. 1(b)] can be quite different. Unfortunately, many texts confuse or jump between these two different methods of analyzing feedback circuits. The most common error found is that some texts that present feedback in terms of two ports assume that $af$ is the same as $RR$, which is not true. This paper has been written to clearly point out this problem.

Manuscript received November 1990; revised December 1991.
The author is with the Department of Electrical Engineering and Computer Science, University of California, Davis, CA 95616.
IEEE Log Number 9201004.

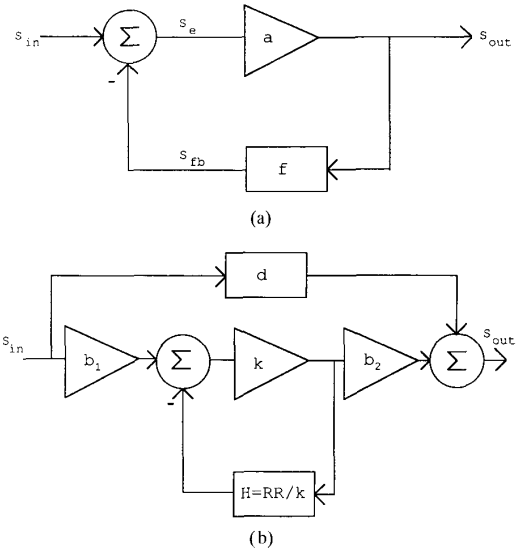


Fig. 1. (a) Ideal feedback block diagram, with unilateral forward amplifier and unilateral feedback. (b) Block diagram associated with the return-ratio formulas.

The two feedback circuit analysis techniques employ different equations that are reviewed in the next section. Examples are given in Section III to demonstrate the potential for large numerical differences between the properly computed loop gain $af$ of Fig. 1(a) and the return ratio for a controlled source. Examples are also used to show that $af$ of Fig. 1(a) is not unique for a given circuit topology; in fact, $af$ can change when the type of feedback changes. The conditions under which $af$ and return ratio are essentially identical are discussed in Section IV. Finally, some of the stated (or implied) assumptions made in many texts that employ two-port feedback analysis are examined and shown to be potentially misleading.

## II. Background and Equations

### A. Feedback Circuit Analysis Method 1 — Bode's Return Ratio

In the original feedback text by Bode [3] and in other text [4], [5], the close-loop properties of feedback circuits are described in terms of the *return ratio* of a dependent source in an active device. The return ratio for a controlled source

0018–9359/92/0800–$03.00 © 1992 IEEE

can be found by: 1) setting all independent sources to zero; 2) selecting a dependent source; 3) breaking the connection between that source and the rest of the circuit; 4) driving the circuit at the break with an independent source of the same type with value $s_t$; and 5) finding the output $s_r$ from the dependent source. Then the return ratio ($RR$) for that dependent source is $RR = -s_r/s_t$, where $s$ may be a current or a voltage.

The formulas presented in this paper are valid for *single-loop* feedback amplifiers [3], [4], [7]. A single-loop feedback circuit is one in which there is a unique signal path that traverses the feedback loop from a dependent source in an active device to its controlling signal. For a single-loop amplifier with multiple active devices, the return ratios for all dependent sources in the active devices are the same or, equivalently, destruction of any active device causes the return ratio for all other dependent sources in the active devices to go to zero.

The exact formula for the closed-loop gain of a feedback amplifier as it relates to the return ratio of a dependent source in an active device is [3], [4], [7]

$$A_{cl} = \frac{b}{1+RR} + d \tag{1}$$

where $b$ is the "forward gain without feedback," and $d$ is the direct signal feedthrough. Formulas for $b$ and $d$ will now be given. Call the value of the dependent source $k$. (In the case of a bipolar transistor's controlled source $i_c = g_m v_{be}$, we have $k = g_m$ and $v_{be}$ is the controlling signal.) Then the calculation of $b$ breaks into three parts: $b = b_1 \cdot k \cdot b_2$ where

$b_1$ = transfer function from the input to the control signal evaluated with $k = 0$

$b_2$ = transfer function from the dependent source to the output evaluated with the input source set to zero, and

$d$ = transfer function from input to output evaluated with $k = 0$.

From its definition, the return ratio is of the form $RR = k \cdot H$, where $H$ is the transfer function from $s_t$ to the controlling signal that is found during $RR$ computation. Therefore, (1) can be rewritten as

$$A_{cl} = b_1 \cdot \frac{k}{1+RR} \cdot b_2 + d = b_1 \cdot \frac{k}{1+kH} \cdot b_2 + d. \tag{2}$$

A block diagram corresponding to (2) is shown in Fig. 1(b). $RR$ is the gain around the loop in Fig. 1(b).

Usually, $d$ can be neglected for low-frequency analysis, but this direct feedthrough term can be important at high frequencies. If the direct feedthrough $d$ is much smaller than the term $b/(1+RR)$, then

$$A_{cl} \approx b/(1+RR). \tag{3}$$

### B. Feedback Circuit Analysis Method 2— Two-Port Analysis

Classical feedback analysis relates the close-loop properties of feedback circuits to the open-loop properties of an appropriately defined forward amplifier $a$, the reverse transmission factor $f$, and the corresponding loop gain $af$ [1], [2], [8], [9]. There are many advantages to using this analysis method.

1) The feedback circuit can be viewed as an implementation of the ideal feedback block diagram [Fig. 1(a)].

2) Simple equations relate the open-loop and closed-loop properties of the feedback circuit, i.e., $Z_{\text{out}}$ and $Z_{\text{in}}$ are modified by the factor $(1+af)$.

3) The closed-loop gain expression

$$A_{cl} = \frac{a}{1+af} \tag{4}$$

is in a "standard" form that allows well-known results from control theory [10]–[12] to be used to predict closed-loop behavior from $a$ and $f$. (The approximate closed-loop formula (3) from method 1 is of the same form as (4), but $a \neq b$ and $af \neq RR$ in general.)

Real feedback circuits have bilateral feedback networks and possibly bilateral amplifiers, whereas the blocks in Fig. 1(a) are a unilateral amplifier and a unilateral feedback network. Manipulation of a real feedback circuit, such as the one shown in Fig. 2(a), into an ideal feedback network that has the same form as Fig. 1(a) is carried out through two-port analysis [1], [2], [8], [9]. An example of this procedure for the shunt–shunt feedback circuit in Fig. 2 is shown in Fig. 3. The first step is identification of a feedback two-port and a forward amplifier two-port. With only a few rare exceptions where a single-loop amplifier employs active feedback, the feedback two-port will be a passive circuit and all active devices will be lumped into the forward amplifier two-port. These two-ports are analyzed separately [Fig. 3(a)], and the interconnection of these two two-ports is manipulated into ideal feedback form with one forward-controlled source and one reverse-controlled source [Fig. 3(b)][1]. Fig. 3(b) agrees with the ideal feedback diagram of Fig. 1(a), since the new ideal forward amplifier two-port in Fig. 3(b) contains all forward signal flow and likewise the ideal feedback two-port contains all reverse signal transfer. (For convenience, the shunt–shunt feedback configuration and the associated $y$ parameters will be used in figures and examples. However, the methods are completely general and can be applied to all four feedback configurations.)

The parameters $a$ and $f$ can be calculated from the redrawn two-port in Fig. 3(b). The reverse transmission factor $f$ is just the $y_{12}$ term of the two-port in Fig. 3(b). For this shunt–shunt example, $f$ can be found simply as

$$f \triangleq \frac{i_{fb}}{v_o} = y_{12} = y_{12f} + y_{12a}. \tag{5}$$

(Here and in the remainder of this paper, the source admittance $y_S$ and load admittance $y_L$ are assumed to have been absorbed into $y_{11a}$ and $y_{22a}$, respectively. Also, a $y$ parameter written as $y_{ij}$ is a "total" parameter; that is, $y_{ij} = y_{ija} + y_{ijf}$.) The forward gain $a$ is given by

$$a \triangleq \frac{v_o}{i_e} = -\frac{y_{21}}{y_{11}y_{22}} = -\frac{y_{21a} + y_{21f}}{(y_{11a} + y_{11f}) \cdot (y_{22a} + y_{22f})}. \tag{6}$$

[1] Sometimes it is impossible to find such two-ports (examples are multiloop circuits such as Fig. 8.28 of [1] or Fig. 5.11 of [5]).

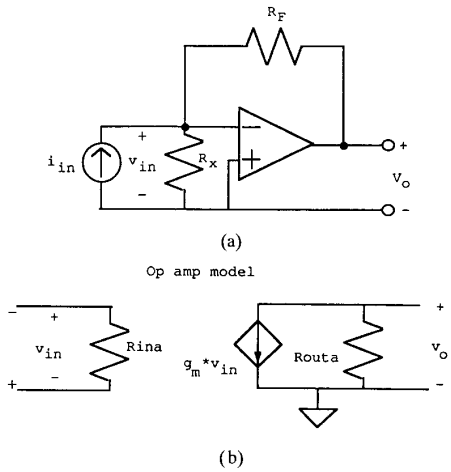


Fig. 2. (a) A shunt–shunt feedback circuit. Resistor values are $R_X = 200\ k\Omega$, $R_F = 100\ k\Omega$. (b) Op amp model. Op amp parameters: $R_{\text{in}a} = 50\ k\Omega$, $R_{\text{out}a} = 1\ M\Omega$, $g_m = 1\ m\Omega^{-1}$.

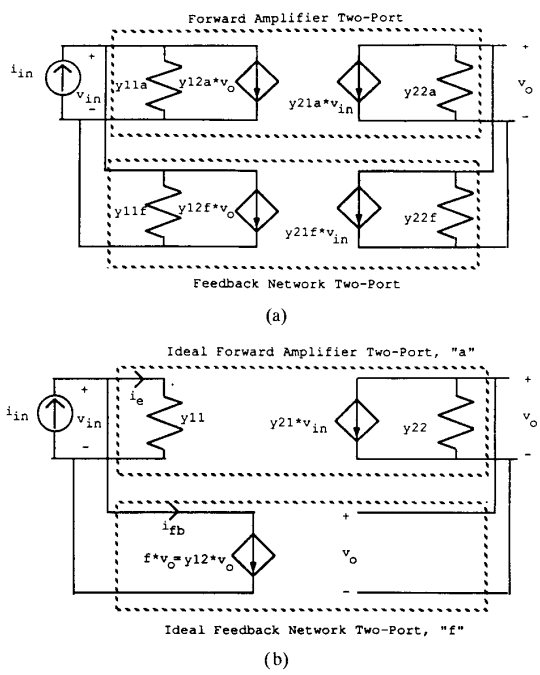


Fig. 3. (a) Two-ports for $a$ and $f$ networks for a shunt–shunt feedback circuit. (b) The result of manipulating the two-ports in (a) into ideal feedback form. [Note: $y_{ij} = y_{ija} + y_{ijf}$.]

For a single-loop amplifier with a passive feedback network, $y_{21a}$ will include the "gain" of all active devices. $y_{21} = y_{21a} + y_{21f}$ will include the forward "gain" plus the feedforward through the passive feedback network. Most texts assume that $|y_{21a}| \gg |y_{21f}|$, which is a dangerous assumption at high frequencies and when considering output loading, as will be discussed in Section V.

The loop gain $af$ of Fig. 1(a) is a crucial parameter. For the shunt–shunt feedback circuit example,

$$af = -\frac{y_{21}y_{12}}{y_{11}y_{22}} = -\frac{(y_{21a} + y_{21f}) \cdot (y_{12a} + y_{12f})}{(y_{11a} + y_{11f}) \cdot (y_{22a} + y_{22f})}. \quad (7)$$

Some preparatory work is required for the two-port analysis to succeed [1]. The type of feedback must be identified, and the correct input and output variables must be identified. A Thevenin and Norton equivalence operation may be necessary at the input port, and the correct two-port representation ($y, z, h$, or $g$) must be used.

### C. Closed-Loop Impedance Formulas

The formulas for calculating closed-loop impedances will now be compared.

*1) Method 1—Return Ratio:* Consider the impedance across any port of a feedback amplifier. First, pick a dependent source $k$ in the circuit. Then Blackman's formula [13] for the impedance looking into any port is

$$Z_{\text{port}}(\text{closed loop}) = Z(\text{port when } k = 0) \cdot \frac{1 + RR(\text{port short circuited})}{1 + RR(\text{port open circuited})} \quad (8)$$

This expression can be used to compute input and output impedances. For instance, when computing $Z_{\text{out}}$(closed loop) for the shunt–shunt feedback circuit in Fig. 2, shorting the output port "kills" the feedback. Therefore, $RR$(output port short circuited) = 0 so (8) reduces to

$$Z_{\text{out}}(\text{closed loop}) = \frac{Z_{\text{out}}(k = 0)}{1 + RR(\text{output port open circuited})}. \quad (9)$$

The negative feedback reduces the output impedance, as expected.

*2) Method 2—Two-Port Analysis:* Method 2 only provides formulas for the closed-loop input and output impedances [1]. The formula for output impedance for the shunt output case (e.g., Fig. 2) is

$$Z_{\text{out}}(\text{closed loop}) = \frac{1}{y_{22}(1 + af)}. \quad (10)$$

It should be emphasized here that (9) and (10) have similar forms and must give the same value for $Z_{\text{out}}$(closed loop) for Fig. 2, but it is not necessarily true that $Z_{\text{out}}(k = 0) = 1/y_{22}$ or that $RR$(output open circuited) = $af$ as will be shown by example in the next section.

## III. Examples Comparing $RR$ and $af$

### A. A Comparison at Low Frequencies

While either method may be used to analyze or design a feedback circuit, there are important differences in the closed-loop formulas incorporating $af$ and $RR$, as noted above. In general, $af$ of Fig. 1(a) is not the same as $RR$ of Fig. 1(b). Many popular texts argue intuitively that measuring the return ratio for a given dependent source in an active device is, in some sense, the same as breaking the loop in Fig. 1(a)

and therefore $RR = af$ [1], [2], [5], [14]. This is correct only if the feedback circuit is constructed of a unilateral forward amplifier and a unilateral feedback network as shown in the block diagram of Fig. 1 (a). However, few practical circuits are constructed of, or can be accurately modeled by, unilateral amplifier and feedback networks. It will be shown that $af \approx RR$ under certain specific conditions which are covered in the next section. To clearly point out the potential for large differences between $af$ of Fig. 1(a) and $RR$ of Fig. 1(b), they will be calculated at low frequency for the single-stage feedback circuit of Fig. 4(a). When the loop is broken at the $g_m$ generator in the bipolar transistor [Fig. 4(c)], the return ratio is

$$\begin{aligned} RR &= g_m r_\pi \cdot \frac{R_C \parallel r_o}{r_\pi + R_F + R_C \parallel r_o} \\ &= 38.4\ m\Omega^{-1} \cdot 5.2\ k\Omega \\ &\quad \cdot \frac{10\ k\Omega \parallel 100\ k\Omega}{5.2\ k\Omega + 1\ k\Omega + 10\ k\Omega \parallel 100\ k\Omega} \\ &= 119. \end{aligned} \tag{11}$$

Using (7) with the two-ports in Fig. 4(d) gives

$$\begin{aligned} af &= \frac{\left[g_m - \frac{1}{R_F}\right] \cdot \frac{1}{R_F}}{\left[\frac{1}{r_o} + \frac{1}{R_F} + \frac{1}{R_C}\right] \cdot \left[\frac{1}{r_\pi} + \frac{1}{R_F}\right]} \\ &= \frac{\left[38.4\ m\Omega^{-1} - \frac{1}{1k\Omega}\right] \cdot \frac{1}{1\ k\Omega}}{\left[\frac{1}{100\ k\Omega} + \frac{1}{1\ k\Omega} + \frac{1}{10\ k\Omega}\right] \cdot \left[\frac{1}{5.2\ k\Omega} + \frac{1}{1\ k\Omega}\right]} \\ &= 28. \end{aligned} \tag{12}$$

These results are significantly different and point out the importance of correctly calculating $RR$ or $af$ and then using the proper associated formulas when calculating closed-loop parameters. The large difference between $RR$ and $af$ in this example exists even though $|y_{21f}| = 1/R_F = 1/100\ k\Omega \ll |y_{21a}| = g_m = 38.4\ m\Omega^{-1}$. The difference can be explained by the theorem in Section IV.

A second set of sample calculations will now be used to illustrate that $af$, the loop gain in Fig. 1(a), can change for a circuit when the input source type and location change while keeping the source-free circuit the same. In contrast, the return ratio, which does not depend upon the location of the input source, can give yet another result. First, consider Fig. 2. The two-port analysis for this shunt–shunt feedback circuit yields

$$\begin{aligned} (af)_{\text{SH-SH}} &= \frac{(y_{21a} + y_{21f}) \cdot (y_{12a} + y_{12f})}{(y_{11a} + y_{11f}) \cdot (y_{22a} + y_{22f})} \\ &= \frac{\left[1\ m\Omega^{-1} - \frac{1}{100\ k\Omega}\right] \cdot \left[\frac{1}{100\ k\Omega}\right]}{\left[\frac{1}{200\ k\Omega} + \frac{1}{50\ k\Omega} + \frac{1}{100\ k\Omega}\right] \cdot \left[\frac{1}{1\ M\Omega} + \frac{1}{100\ k\Omega}\right]} \\ &= 25.7. \end{aligned} \tag{13}$$

If the input source is changed to the voltage source shown in Fig. 5, then the feedback is series-shunt and $h$ parameters must be used to manipulate the circuit into a form equivalent to Fig. 1(a) [1]. The result is

$$\begin{aligned} (af)_{\text{SER-SH}} &= \frac{(h_{21a} + h_{21f}) \cdot (h_{12a} + h_{12f})}{(h_{11a} + h_{11f}) \cdot (h_{22a} + h_{22f})} \\ &= \frac{\left[1\ m\Omega^{-1} \cdot 50\ k\Omega + \frac{200\ k\Omega}{100\ k\Omega + 200\ k\Omega}\right] \cdot \left[\frac{200\ k\Omega}{100\ k\Omega + 200\ k\Omega}\right]}{(50\ k\Omega + 100\ k\Omega \parallel 200\ k\Omega) \cdot \left[\frac{1}{1\ M\Omega} + \frac{1}{100\ k\Omega + 200\ k\Omega}\right]} \\ &= 66. \end{aligned} \tag{14}$$

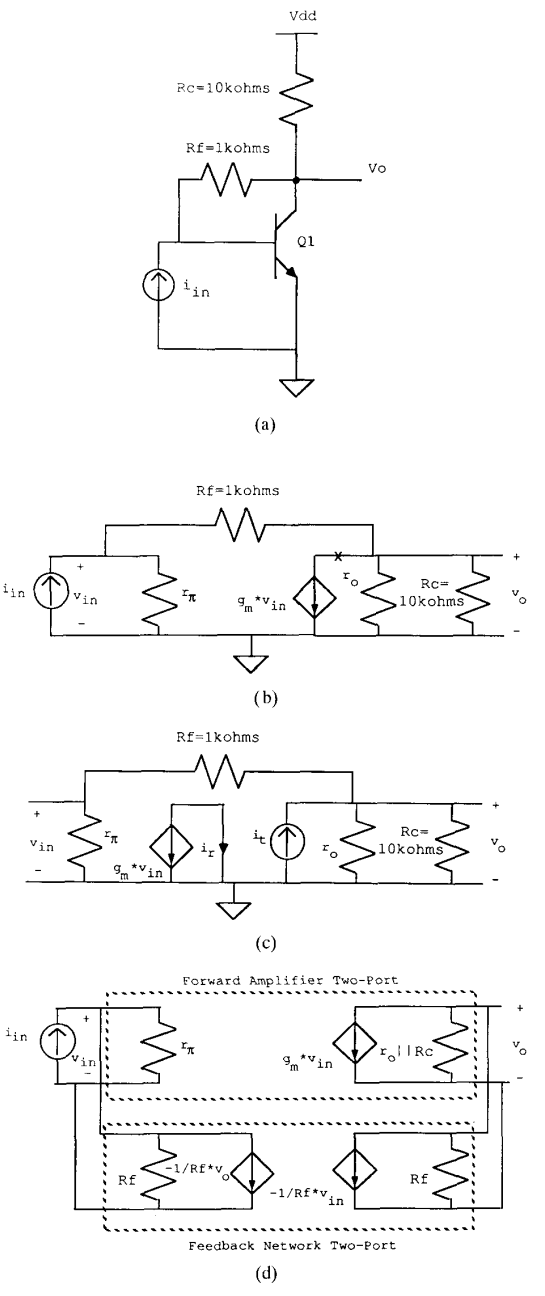


Fig. 4. (a) Bipolar circuit with local shunt–shunt feedback. (b) Small-signal model ($g_m = 38.4\ m\Omega^{-1}$, $r_\pi = 5.2\ k\Omega$, and $r_o = 100\ k\Omega$). (c) Return-ratio computation for the $g_m$ generator. (d) The result of two-port analysis.

Note that these two values differ by more than a factor of two. The different types of feedback at the input necessitate

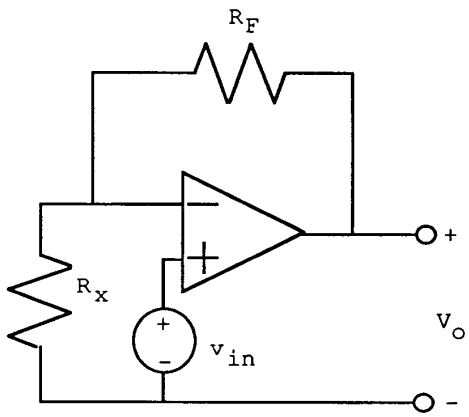


Fig. 5. Sample series–shunt feedback circuit for calculations. (Component values are given in Fig. 2).

the change to $h$ parameter two-ports to yield an ideal feedback network similar to Fig. 3(b), which agrees with Fig. 1(a). As a result, both $a$ and $f$ changed and, subsequently, $af$ changed. This observation that $af$ can change when different two-ports are used has been made previously by Hakim [12, p. 123] and Mulligan [15].

In contrast, the return ratios for the $g_m$ generator in these last two feedback circuits are the same since the $RR$ does not depend on the location of the input source. The $RR$ is easily calculated by finding the Thevenin equivalent of the op amp's $g_m$ generator and output resistance $R_{\text{out}a}$ and then applying a voltage divider formula

$$\begin{aligned} RR &= (g_m \cdot R_{\text{out}a}) \cdot \frac{R_X \parallel R_{\text{in}a}}{R_X \parallel R_{\text{in}a} + R_F + R_{\text{out}a}} \\ &= \left(1\ m\Omega^{-1} \cdot 1\ M\Omega\right) \\ &\quad \cdot \frac{200\ k\Omega \parallel 50\ k\Omega}{200\ k\Omega \parallel 50\ k\Omega + 100\ k\Omega + 1\ M\Omega} \\ &= 35.1. \end{aligned} \tag{15}$$

It should be noted from these last three calculations that the usual textbook assumptions $|y_{21f}| \ll |y_{21a}|$, $|y_{12a}| \ll |y_{12f}|$, $|h_{21f}| \ll |h_{21a}|$, and $|h_{12a}| \ll |h_{12f}|$ [1], [2], [16], which are true above, are not sufficient to guarantee that $RR = af$.

Calculation of the closed-loop gain and output impedance using the equations in Section II can now be compared for the circuit in Fig. 2. First, the closed-loop gain from the classical feedback equation is

$$\begin{aligned} A_{cl} &= \frac{1}{f} \cdot \frac{(af)_{\text{SH-SH}}}{1 + (af)_{\text{SH-SH}}} \\ &= \frac{1}{y_{12f}} \cdot \frac{(af)_{\text{SH-SH}}}{1 + (af)_{\text{SH-SH}}} \\ &= -100\ k\Omega \cdot \left[\frac{25.7}{1 + 25.7}\right] \\ &= -96.2\ k\Omega. \end{aligned} \tag{16}$$

The computation of $A_{cl}$ using a return ratio is more involved. Taking $k = g_m$ of the op amp, the terms $b_1$ and $b_2$ must be found with respect to this source.

$$\begin{aligned} b_1 &= \left.\frac{v_{\text{in}}}{i_{\text{in}}}\right|_{g_m = y_{21a} = 0} = R_x \| R_{\text{in}a} \| (R_F + R_{\text{out}a}) \\ &= 200\ k\Omega \| 50\ k\Omega \| (100\ k\Omega + 1\ M\Omega) = 38.6\ k\Omega \end{aligned} \tag{17}$$

$$\begin{aligned} b_2 &= \left.\frac{v_0}{g_m v_{\text{in}}}\right|_{i_{\text{in}} = 0} = -[R_{\text{out}a} \| (R_F + R_X \| R_{\text{in}a})] \\ &= -[1\ M\Omega \| (100\ k\Omega + 200\ k\Omega \| 50\ k\Omega)] \\ &= -122.8\ k\Omega. \end{aligned} \tag{18}$$

The direct feedthrough term is

$$\begin{aligned} d &= \left.\frac{v_0}{i_{\text{in}}}\right|_{g_m = y_{21a} = 0} = \frac{R_{\text{out}a} \cdot (R_{\text{in}a} \| R_X)}{R_{\text{in}a} \| R_X + R_{\text{out}a} + R_F} \\ &= \frac{1\ M\Omega \cdot (50\ k\Omega \| 200\ k\Omega)}{50\ k\Omega \| 200\ k\Omega + 1\ M\Omega + 100\ k\Omega} = 35.1\ k\Omega. \end{aligned} \tag{19}$$

These values yield a closed-loop gain of

$$\begin{aligned} A_{cl} &= \frac{b_1 \cdot g_m \cdot b_2}{1 + RR} + d \\ &= \frac{38.6\ k\Omega \cdot 1\ m\Omega^{-1} \cdot (-122.8\ k\Omega)}{1 + 35.1} + 35.1\ k\Omega \\ &= -96.2\ k\Omega \end{aligned} \tag{20}$$

which is the same value computed in (16).

Finally, the computations of the output impedance will be compared. Using the two-port based expressions, the ouput impedance is [from (10)]

$$\begin{aligned} Z_{\text{out}}(\text{closed loop}) &= \frac{1}{(y_{22a} + y_{22f})(1 + af)} \\ &= \frac{1}{\left[\frac{1}{1\ M\Omega} + \frac{1}{100\ k\Omega}\right](1 + 25.7)} \\ &= \frac{90.9\ k\Omega}{26.7} = 3.4\ k\Omega. \end{aligned} \tag{21}$$

Using Blackman's formula, the output impedance is [from (9)]

$$\begin{aligned} Z_{\text{out}}(\text{closed loop}) &= \frac{Z_{\text{out}}(k = 0)}{1 + RR(\text{output port open})} \\ &= \frac{1\ M\Omega \| (100\ k\Omega + 50\ k\Omega \| 200\ k\Omega)}{1 + 35.1} \\ &= \frac{122.8\ k\Omega}{36.1} = 3.4\ k\Omega. \end{aligned} \tag{22}$$

### *B. A Comparison at High Frequencies*

$RR$ and $af$ are valuable for determining the stability of a feedback circuit and for predicting closed-loop frequency response and step response. The fact that $RR(s)$ can be used to check stability of a single-loop amplifier was rigorously established long ago [3]. With method 2, we can predict stability solely from $[1 + af(s)]$ if $a(s)$ is stable. A brief argument for the stability of $a(s)$ is now given. Consider a single-loop shunt–shunt feedback amplifier with passive feedback which has been manipulated into the form of Fig. 3(a). $y_{21a}$ will include the effect of all active devices, which are in simple

cascade if there is more than one active device, and the effect of interstage passive components. Therefore, $y_{21a}$ will have only left-half-plane (LHP) poles. Also $y_{21f}$ will have only LHP poles since it is computed from the passive feedback network. Therefore, $y_{21} = y_{21a} + y_{21f}$ is stable. $y_{11}$ and $y_{22}$ will have only LHP poles and zeros, since they are one-port admittances computed with the feedback disabled (e.g., $y_{11} = i_{\text{in}}/v_{\text{in}}|_{v_{\text{out}}=0}$; setting $v_{\text{out}} = 0V$ kills the feedback). As a result, $a = y_{21}/y_{11}y_{22}$ is stable. Therefore, any instability in the closed-loop gain is a result of right-half-plane roots of $[1 + af(s)]$, which can be detected by applying the Nyquist stability criterion to $af(s)$.

There may be significant differences between $RR$ and $af$ at dc, as demonstrated by the examples above, and at high frequencies, as will be illustrated by the integrator in Fig. 6(a). Assuming the unloaded op amp in the figure has a one-pole voltage gain, $A_v(s) = A_0/(1 + s/\omega_u)$, and a large output resistance $R_{\text{outa}}$ (as would be the case for a one-stage CMOS op amp [17]), the loop gain for this integrator is

$$af(s) = \frac{\left[\frac{A_v(s)}{R_{\text{outa}}} - sC_F\right] sC_F}{\left[\frac{1}{R_{\text{outa}}} + sC_F\right](sC_{\text{in}} + sC_F)} = \frac{\left[A_o - sR_{\text{outa}}C_F - s^2\frac{R_{\text{outa}}C_F}{\omega_u}\right]\frac{C_F}{C_F+C_{\text{in}}}}{(1 + sR_{\text{outa}}C_F)\left[1 + \frac{s}{\omega_u}\right]} \quad (23)$$

which has two poles and two zeros—one zero is in the left-half plane and the other is in the right-half plane. The return ratio for $A_v$ is

$$RR(s) = \frac{A_v(s)/sC_{\text{in}}}{R_{\text{outa}} + 1/sC_F + 1/sC_{\text{in}}} = \frac{A_o \cdot \frac{C_F}{C_F+C_{\text{in}}}}{\left[1 + sR_{\text{outa}}\frac{C_FC_{\text{in}}}{C_F+C_{\text{in}}}\right]\left[1 + \frac{s}{\omega_u}\right]}. \quad (24)$$

The $RR(s)$ has two poles and no zeros. Plots of $af(s)$ and $RR(s)$ are shown in Fig. 6(b) and (c). They differ significantly at high frequencies: $RR \to 0$ as $\omega \to \infty$ but $af \to -0.9$ as $\omega \to \infty$. Despite the differences between $af(\omega)$ and $RR(\omega)$, both yield a positive phase margin since the circuit is stable.

Differences between $RR(s)$ and $af(s)$ are not surprising since the formulas for $RR$ and $af$ are significantly different, as will be clearly shown in the next section. In the example above, $a(s)$ includes feedforward through the feedback network ($y_{21} = y_{21a} + y_{21f}$), so $a(s)$ and $af(s)$ have zeros which do not appear in $RR(s)$. This feedforward is handled solely by $d(s)$ in method 1.

Techniques for exactly simulating $RR(s)$ and $af(s)$ using SPICE are described in [18]. The ability to exactly simulate $RR$ and $af$ is valuable for circuit designers and may be useful as a teaching tool, as it can help to convince the students that the typical approximations, which are often used to simplify hand calculations, are not needed during simulation.

## IV. When Does $RR = af$?

Since $RR$ and $af$ are often confused, it is useful to know when the return ratio for a dependent source in an active device approximates the loop gain $af$ of Fig. 1(a) that results from two-port analysis. This is the subject of the following theorem.

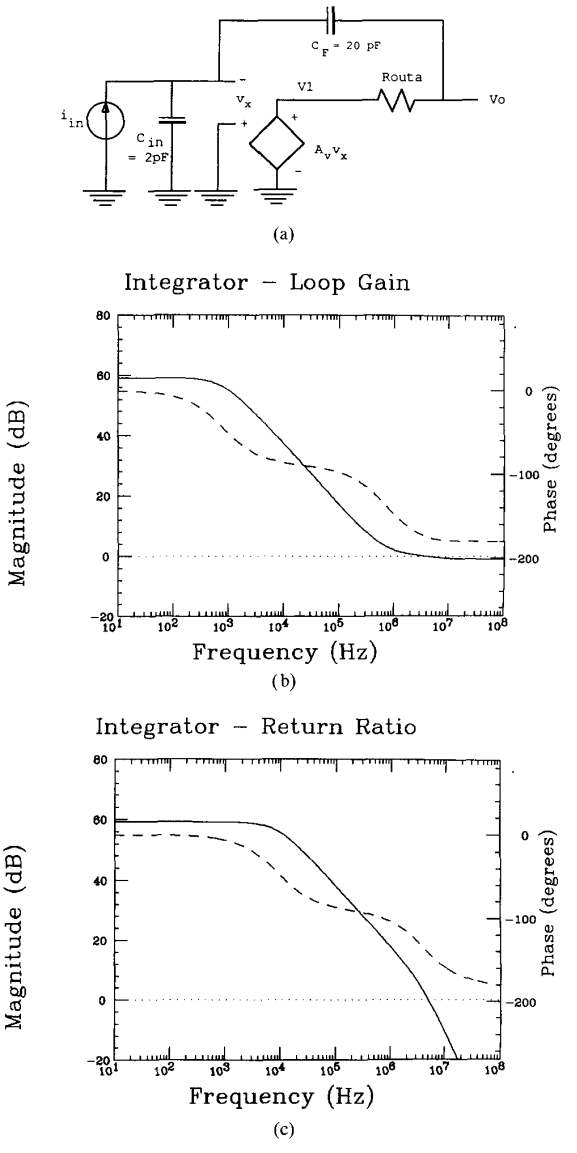


Fig. 6. (a) Shunt–shunt feedback circuit (integrator.) Op amp parameters: $A_v(s) = 1000/(1 + s/2.5e7)$, $R_{outa} = 10\ M\Omega$, and $R_{ina} = \infty\Omega$. Plots of (b): $af(s)$; and (c) $RR(s)$ for the integrator circuit in (a). (Dashed lines plot the phase.)

*THEOREM*[2] Consider a single-loop feedback amplifier that can be modeled by Fig. 3(a). Assume that the values of all the controlled sources associated with all the active devices enter $y_{21a}$ in simple product form. Then the return ratio for the dependent source $y_{21a}$, $RR(y_{21a})$, will be an accurate approximation of the loop gain $af$ of Fig. 1(a) if: 1) $|y_{21a}| \gg |y_{21f}|$; and 2) $|(y_{11a} + y_{11f}) \cdot (y_{22a} + y_{22f})| \gg |(y_{12a} + y_{12f}) \cdot y_{21f}|$, where $y$ should be replaced by the

[2]This theorem can be modified in a straightforward way to handle all four possible two-port models using $y$, $z$, $g$, or $h$ parameters as required [1].

appropriate two-port parameter— $y, z, g$, or $h$ [1]—for the feedback circuit under consideration.

It is assumed that source and load admittances, $y_S$ and $y_L$, have been absorbed into $y_{11a}$ and $y_{22a}$. The condition that $RR(y_{21a})$ has the values of the controlled sources in simple product form (e.g., $RR(y_{21a}) \propto g_{m1} \cdot g_{m2} \cdot g_{m3}$) assures that $RR(y_{21a})$ equals the $RR$ for any dependent source associated with any active device in the circuit [3], [4].

The theorem gives the conditions, in terms of two-port parameters, under which $RR$ and $af$ are approximately equal, and it can be proved by calculating the $RR$ for $y_{21a}$ and comparing it to $af$. Computing $RR(y_{21a})$ in Fig. 3(a) yields[3]

$$RR(y_{21a}) = \frac{y_{21a} \cdot (y_{12a} + y_{12f})}{(y_{22a} + y_{22f})(y_{11a} + y_{11f}) - y_{21f}(y_{12a} + y_{12f})} = \frac{y_{21a} \cdot (y_{12a} + y_{12f})}{(y_{22a} + y_{22f})(y_{11a} + y_{11f})\left[1 - \frac{y_{21f} \cdot (y_{12a} + y_{12f})}{(y_{22a} + y_{22f})(y_{11a} + y_{11f})}\right]} \tag{25}$$

This formula is slightly different than $(af)_{\text{SH-SH}}$ in (13). These equations for $RR(y_{21a})$ and $(af)_{\text{SH-SH}}$ will give nearly equal results if $|y_{21a}| \gg |y_{21f}|$ so that $y_{21a} + y_{21f} \approx y_{21a}$, which is the first condition in the theorem, and if the term in large brackets in the denominator above is approximately equal to one, which is true if

$$\gamma \triangleq \left| \frac{y_{21f}}{y_{22a} + y_{22f}} \right| \cdot \left| \frac{y_{12a} + y_{12f}}{y_{11a} + y_{11f}} \right| \ll 1. \tag{26}$$

This inequality is equivalent to the second condition in the theorem. For the examples presented above, $\gamma = 0.756$ for the circuit in Fig. 4(a) and $\gamma = 0.26$ for the circuit in Fig. 2; neither of these values are small compared to unity, which leads to $RR(y_{21a}) \neq af$.

The significance of (26) can be explained with the aid of Fig. 7. The computation of $af$ can be viewed as a return-ratio computation for the unilateral source $y_{21}$ as shown in Fig. 7(b) (this will be discussed again later). In this situation, $y_{21a}$ and $y_{21f}$ have been combined since they are in parallel. Under the assumption $|y_{21a}| \gg |y_{21f}|$, $y_{21f}$ can be safely neglected. On the other hand, $y_{21f}$ is isolated from $y_{21a}$ during the computation of the return ratio for $y_{21a}$ [Fig. 7(a)]; therefore, the assumption $|y_{21a}| \gg |y_{21f}|$ is of little significance. In this case, the $y_{21f}$ generator is connected to $y_{22}$, so the output voltage $v_o$ to the right of the break in Fig. 7(a) is given by

$$v_o = \frac{i_t}{y_{22}} - \frac{y_{21f}}{y_{22}} \cdot v_{\text{in}}. \tag{27}$$

The voltage generated at the input port is $v_{\text{in}} = -y_{12} \cdot v_o / y_{11}$, which leads to

$$v_o = \frac{i_t}{y_{22}} - \frac{y_{21f}}{y_{22}} \cdot v_{\text{in}} = \frac{i_t}{y_{22}} + \frac{y_{21f} y_{12}}{y_{22} y_{11}} \cdot v_o. \tag{28}$$

[3] In this equation, the term $y_{12a} + y_{12f}$ appears. $y_{12a}$ could be ignored by assuming that $|y_{12a}| \ll |y_{12f}|$, but if the circuit is a single-loop amplifier, the $y_{12a}$ term must be from global feedback inside the amplifier network. Therefore, it is best to keep this term although in practice it is usually negligible when compared to $y_{12f}$.

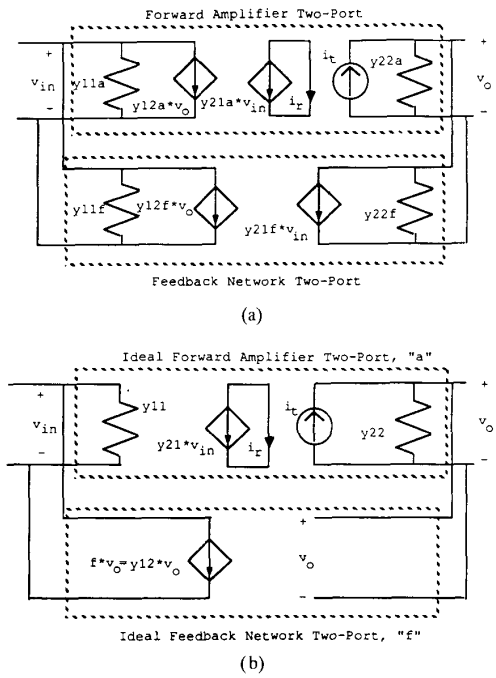


Fig. 7. Comparing (a) $RR(y_{21a})$ and (b) $af$ computations for a shunt–shunt feedback circuit (see Fig. 3) [Note: $y_{ij} = y_{ija} + y_{ijf}$.]

If the last term on the right-hand side is small compared to the left-hand side, which is true when (26) is satisfied, then the effect of the $y_{21f}$ generator in the $RR(y_{21a})$ calculation is negligible. Therefore, $y_{21f}$ can be deleted from Fig. 7(b), making Fig. 7(a) and (b) identical, which leads to $af = RR$.

Perhaps (27) most clearly explains why $RR(y_{21a})$ does not equal $af$. If the loop in Fig. 1(a) is broken, the signal flows around the loop in one direction only. However, when $RR(y_{21a})$ is found, the feedback network sends signal both forward and backward, which violates the ideal block diagram in Fig. 1(a). Therefore, it is clear that $af$ can be found only after manipulation of the two-ports into the form shown in Fig. 3(b), which has the same signal flow as Fig. 1(a).

There is one easily verified situation that gives $RR = af$, namely when the output variable is the voltage across a controlled voltage source or the current through a controlled current source. This will be shown by example using Fig. 6(a). With the output taken as the voltage $V1$ across the voltage-controlled voltage source, the two-port describing the forward amp $a$ would have $y_{22a} = \infty\ \Omega^{-1}$ and $y_{21a} = \infty\ \Omega^{-1}$, with $y_{21a}/y_{22a} = A_v$ and $y_{12a} = 0\ \Omega^{-1}$. These values satisfy the conditions of the theorem, therefore leading to $RR = a'f'$, where $a'f'$ is the loop gain of Fig. 1(a) if the output is voltage $V1$.

## V. Examining a Common Assumption in Feedback Analysis

A common assumption in feedback analysis is that $y_{21f}$, the feedforward through the feedback network, is negligible and therefore can be ignored. This is a somewhat danger-

ous simplification for two reasons. First, the assumption is motivated by the observation that $y_{21a}$ is a transconductance due to active elements, whereas $y_{21f}$ is a feedforward through a passive network. Therefore, $|y_{21f}|$ will usually be smaller than $|y_{21a}|$. Although this argument seems reasonable, it is not always correct. Taking for example the shunt–shunt feedback circuit in Fig. 2, the forward amplifier is typically designed to have a high voltage gain, which can be achieved with a low transconductance $y_{21a}$ and large output resistance. (This is, in fact, the case in many CMOS one-stage op amps [17].) In such a case, it is quite possible that $|y_{21a}|$ is not necessarily much larger that $|y_{21f}|$. So, the assumption $|y_{21a}| \gg |y_{21f}|$ must be checked for validity.

Furthermore, ignoring the feedforward term $y_{21f}$ can lead to an error when estimating the output loading due to the feedback network that the forward amplifier "sees." The problem will be illustrated by Fig. 8 using the integrator in Fig. 6. If the $y_{21f}$ term is ignored, then the two-port reduces to that shown in Fig. 8(b). This reduced two-port gives the impression that the output loading due to the feedback network is the feedback capacitance $C_F$. If $y_{21f}$ is retained, then the effective loading of the feedback circuit on the forward amplifier can be found by calculating the ratio of the output voltage $v_o$ to the load current $i_l$ flowing into the feedback network in Fig. 8(a)

$$\begin{aligned} i_l\Big|_{i_{\text{in}}=0A} &= sC_F v_o + y_{21f} v_i = sC_f v_o - \frac{y_{21f} y_{12f}}{y_{11a} + y_{11f}} v_o \\ &= sC_F v_o - \frac{(sC_F)^2}{sC_i + sC_F} v_o = \frac{sC_F C_i}{C_i + C_F} v_o. \end{aligned} \tag{29}$$

Therefore,

$$y(fb \text{ loading at output}) = \frac{i_l}{v_o}\Big|_{i_{\text{in}}=0} = \frac{sC_F C_i}{C_i + C_F}. \tag{30}$$

That is, the output loading due to the feedback network is $C_F$ in series with $C_i$, which is the same output loading as would result from a $RR$ analysis. [Breaking the loop in Fig. 6(a) gives a circuit with the series connection of $C_F$ and $C_{\text{in}}$ connected to the output as shown in Fig. 8(c).] The point is that, even if $|y_{21a}| \gg |y_{21f}|$, $y_{21f}$ must be retained when considering the feedback loading at the output because, from an output loading point of view, $y_{21f}$ is not in parallel with $y_{21a}$ and therefore it is not reasonable to neglect it.

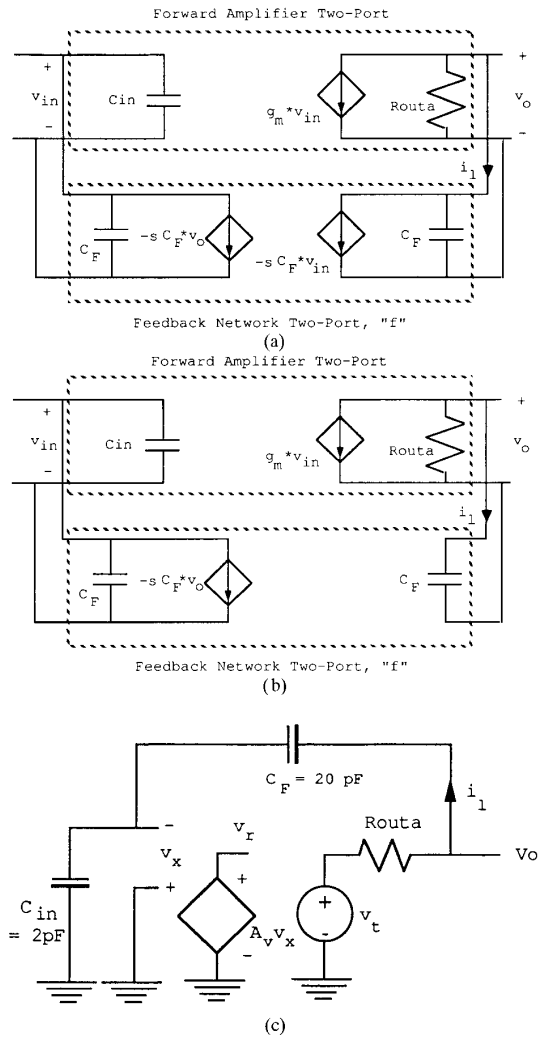


Fig. 8. Finding the output loading due to the feedback network in Fig. 6. (a) Using the two-port analysis to find the current $i_l$ flowing into the output port of the feedback network; (b) same as (a) with the $y_{21f}$ controlled source deleted; and (c) output loading is clearly $C_F$ in series with $C_{\text{in}}$ when computing $RR$.

## VI. Viewing Two-Port Feedback Analysis as a Version of $RR$ Analysis

Feedback theory was originally developed by Bode using the return-ratio concept, with return ratios being computed for the controlled sources associated with vacuum tubes. It is important to realize that the two-port-based-analysis formulas can be derived by generalizing the return-ratio analysis. If the feedback circuit is first put into ideal feedback form using two-port analysis such as in Fig. 3(b), and then the return-ratio formulas are applied with respect to the combined controlled source $y_{21} = y_{21a} + y_{21f}$ as shown in Fig. 7(b), the resulting return-ratio-based formulas will be exactly the same as the two-port-based formulas. $RR(y_{21})$ will be the same as $af$ since there is no feedforward through the modified ideal feedback network in Fig. 3(b), and therefore the two conditions of the theorem are satisfied with respect to the modified network of Fig. 3(b).

## VII. Conclusion

The two most common feedback circuit analysis methods have been summarized. Either analysis technique alone is sufficient for analyzing single-loop feedback circuits. A working knowledge of both analysis methods is beneficial, but covering both in depth is probably too much material for any one course in circuit design. The two methods can give widely different intermediate results but always agree on the final closed-loop parameters. This paper has been written because, unfortunately, one of the following errors appears in many texts: 1) Feedback is introduced with Fig. 1(a) and

then all subsequent analysis of feedback circuits is carried using Bode's return-ratio theory. However, it is incorrectly stated that the $RR$ for a controlled source is the same as $af$ of Fig. 1(a) [3], [5]; or 2) Feedback is introduced with Fig. 1(a) and then two-port analysis is employed to show that feedback circuits can be manipulated to agree with the ideal block diagram. However, an intuitive argument is incorrectly used to conclude that $RR$ of a controlled source is the same as $af$ of Fig. 1(a) [1], [2], [6], [14]. Mixing analyses can be troublesome. For instance, incorrectly using $RR$ of (15) for $af$ in (21) leads to an incorrect result for $Z_{\text{out}}$.

Whereas computation of $RR$ has the intuitive feel of breaking the loop and measuring the loop transmission, it is incorrect to make the blanket statement that $RR$ for a dependent source is the same as $af$ of Fig. 1(a). Examples have been included to show that not only is $af \neq RR$, but that $af$ can change if the type of feedback is changed for a given circuit. A theorem has been presented that gives the conditions under which $af \approx RR$. These two conditions are more involved than the typical assumptions made in textbooks that present feedback using two-port analysis. Finally, the assumption that $y_{21f}$ can be neglected has been examined and shown to lead to an incorrect estimate of the loading of the feedback network on the forward amplifier.

It is hoped that the material presented here will help authors of circuit texts to avoid confusing and potentially misleading statements when discussing the ideal feedback block diagram of Fig. 1(a) in the context of two-port and/or return-ratio analysis.

## Acknowledgment

The author would like to thank S. Lewis for his thorough review of an early version of this paper, and numerous students for their comments and assistance.

## References

[1] P. R. Gray and R. G. Meyer, *Analysis and Design of Analog Integrated Circuits.* New York, NY: Wiley, 1984.
[2] A. S. Sedra and K. C. Smith, *Microelectronic Circuits.* New York, NY: Holt, Rinehart, and Winston, 1987.
[3] H. W. Bode, *Network Analysis and Feedback Amplifier Design.* New York, NY: Van Nostrand, 1945.
[4] E. S. Kuh and R. A. Rohrer, *Theory of Linear Active Networks.* San Francisco, CA: Holden-Day, 1967.
[5] S. Rosenstark, *Feedback Amplifier Principles.* New York, NY: MacMillan, 1986.
[6] J. Millman and A. Grabel, *Microelectronics.* New York, NY: McGraw-Hill, 1987.
[7] S. S. Hakim, *Feedback Circuit Analysis.* New York, NY: Wiley, 1966.
[8] C. A. Holt, *Electronic Circuits—Digital and Analog.* New York, NY: Wiley, 1978.
[9] P. E. Gray and C. L. Searle, *Electronic Principles: Physics, Models, and Circuits.* New York, NY: Wiley, 1969.
[10] K. Ogata, *Modern Control Engineering.* Englewood Cliffs, NJ: Prentice-Hall, 1970.
[11] D. B. Miron, *Design of Feedback Control Systems.* San Diego, CA: Harcourt Brace Jovanovich, 1989.
[12] V. W. Eveleigh, *Introduction to Control System Design.* New York, NY, McGraw-Hill, 1972.
[13] R. B. Blackman, "Effect of feedback on impedance," *Bell Sys. Tech. J.*, vol. 23, pp. 269–277, Oct. 1943.
[14] D. Casasent, *Electronic Circuits.* New York, NY: Quantum, 1973.
[15] J. H. Mulligan, "Signal transmission in non-reciprocal systems," in *Proc. Int. Symp. Active Networks and Feedback Syst.*, Polytech. Inst. Brooklyn, New York, 1960, pp. 125–153.
[16] M S. Ghausi, *Electronic Devices and Circuits—Discrete and Integrated.* New York, NY: Holt, Rinehart, and Winston, 1985.
[17] P. R. Gray and R. G. Meyer, "MOS operational amplifier design—A tutorial overview," *IEEE J. Solid State Circ.*, vol. SC-17, pp. 969–982, Dec. 1982.
[18] P. J. Hurst, "Exact simulation of feedback circuit parameters," *IEEE Trans. Circ. Syst.*, vol. 38, pp. 1382–1389, Nov. 1991.

**Paul J. Hurst** (S'76–M'83) received the B.S., M.S., and Ph.D. degrees in electrical engineering from the University of California at Berkeley in 1977, 1979, and 1983, respectively.

After receiving the Ph.D. degree, he remained at UC Berkeley for one year as an Adjunct Lecturer, teaching the undergraduate IC design courses and working on an MOS implementation of a delta-sigma modulator for analog-to-digital conversion. In 1984, he joined the Telecommunications Design Group of Silicon Systems Inc., Nevada City, CA, where he was involved in the circuit and system design of CMOS integrated circuits for voiceband modems. In 1986, he joined the faculty of UC Davis where he is now an Associate Professor teaching courses in analog and digital circuit design. His research interests are in the area of analog and digital integrated circuit design for signal processing applications. He is active as a consultant to industry in the area of analog integrated circuit design.